ADJUSTABLE SOFT-DOWN STAY

Lapcon

NSDX-10 (R/L)

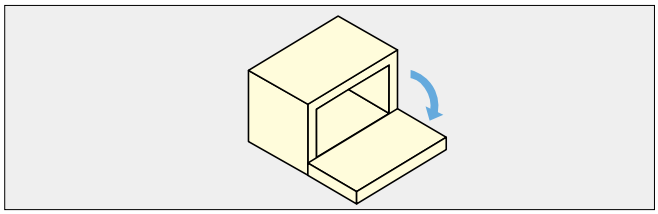

Features

- For downward-opening flap doors.
- Can also be used with piano, butt, or drop hinges.
- Built-in catch holds flap in closed position.
- Successfully passed 30,000 open/close cycles in a private test.
- Opening speed adjustable.

Torque

- With 1 stay
  Torque = 1.96 - 6.86 N·m (20 - 70 kgf·cm)
- With 2 stays, the torque will be doubled.

Sold Separately

①Mounting plate NSDX-SZ (below)
②Mounting plate NSDX-CZ (P.522)
③Mounting plate NSDX-AZ for 20 mm aluminium frame (P.522)
④Mounting plate NSDX-GZ for glass door (P.522)
⑤SDS-50G for glass door (P.522)

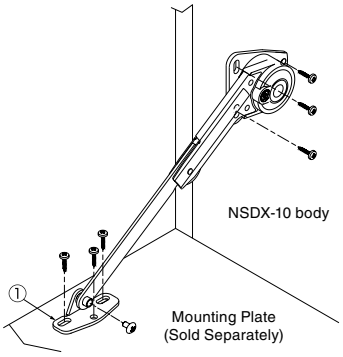

Installation (Opening Angle 90˚)

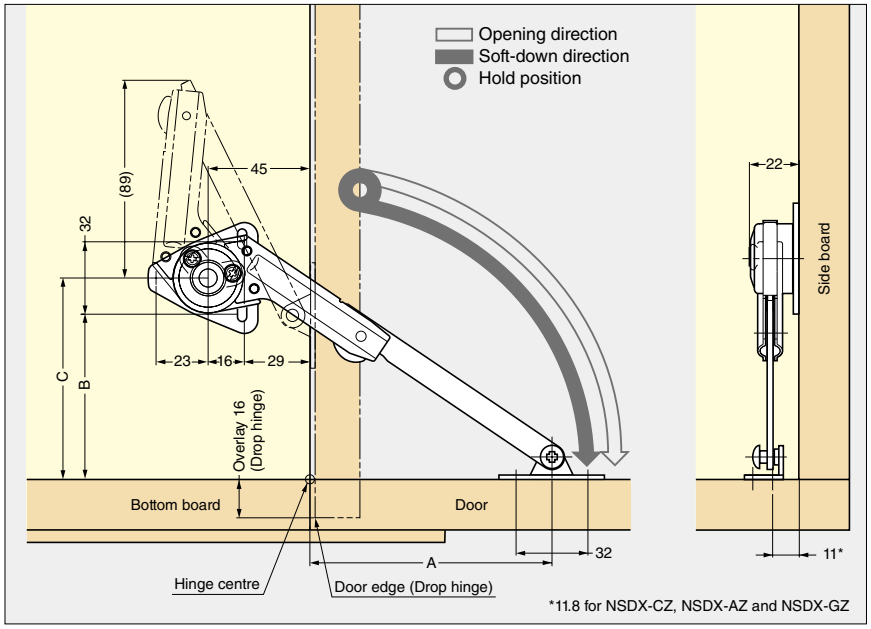

Hinge Type	A	B	C
Drop Hinge (SDH-001)	97*1	91	107
Drop Hinge (SDH-P)	98*2	88	104
Single Knuckle Hinge	90	99	115

- *1: In case overlay 16 mm.
- *2: In case overlay 19 mm.

Installation for Mounting Plate

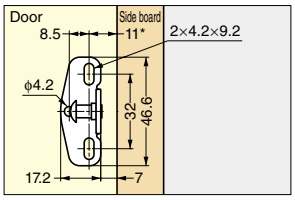

Body

Item Code	Item Name	L/R	Material	Finish	Torque Moment /piece	Catch Function		Weight	Box	Carton
						Opened Position	Closed Position			
180-109-008	NSDX-10R	Right	Zinc Alloy (ZDC), Steel	Nickel	1.96 - 6.86 N·m (20 - 70 kgf·cm)	×	○	181 g	20 pcs	80 pcs
180-109-009	NSDX-10L	Left	Zinc Alloy (ZDC), Steel	Nickel		×	○	181 g	20 pcs	80 pcs

Mounting Plate (Sold Separately)

Item Code	Item Name	Type	Weight	Box	Carton
180-109-032	NSDX-SZ	Screw on	14 g	160 pcs	640 pcs

SDS Face Plate (Sold Separately)

*Please use with NSDX-GZ mounting plate.

Item Code	Item Name	Material	Finish/Colour	Weight	Box	Carton
180-100-260	SDS-50G-CR	Zinc Alloy (ZDC)/ABS	Chrome/Black	25 g	50 pcs	200 pcs
180-928-046	SDS-50G-BL	Zinc Alloy (ZDC)/ABS	Black	25 g	50 pcs	200 pcs