Interleaf continuous hinge

NEW

270° STAINLESS STEEL

The hinge sits directly on door frame for minimal gap (3mm).
Aesthetically stylish.
Maintenance free polymer shrouded bearings.

Tested to BS EN1935 Grade 14 (160kgs).

Produced mainly in stainless steel, for a complete description of the materials contact us.
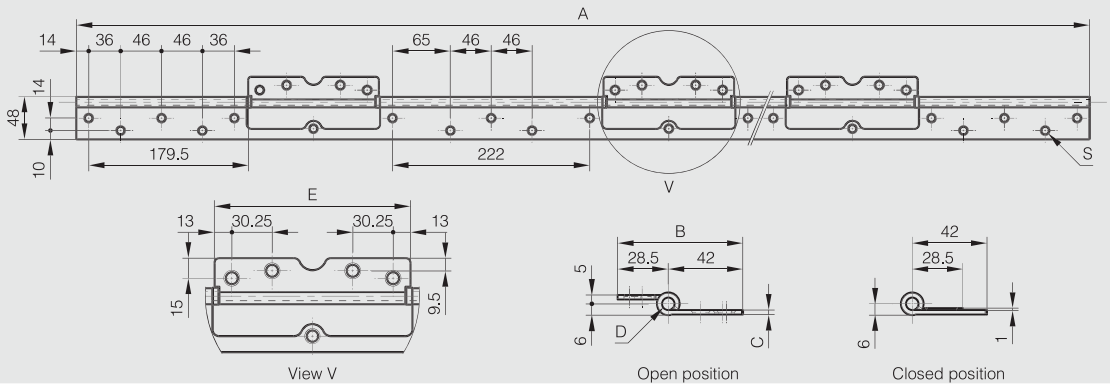
	Part number	Material	Finish	A	B	C	D	E	S	Note	Weight (g)
NEW	42-7-4610	304 stainless steel	satin polished	2134	70.5	2.5	7	147	9	drilled	3400